Stability

INEL 5207 - Spring 2008 - M. Toledo
ECE Dept. UPRM

Stability

Basics

- Basic feedback equation:

$$A_f(s) = \frac{a(s)}{1 + \beta(s)a(s)}$$

  Thus, feedback moves the poles of the amplifier's transfer function.

- Poles of A_f are roots of $1 + \beta a$. Thus, feedback moves the poles of the amplifier's transfer function.

- The idea is to determine information about the stability of A_f from the loop gain $T(s) = \beta(s)a(s)$.

Nyquist Theorem

Let ω_{180° be the frequency at which the loop gain's phase angle is -180°. If

$$| T(j\omega_{180^\circ}) | = | \beta(j\omega_{180^\circ}) A(j\omega_{180^\circ}) | > 1$$

then the amplifier is unstable. Otherwise, it is stable.

Nyquist theorem allows us to answer questions about the stability of A_f by analyzing the loop gain βA.

Phase and Gain Margin

- Gain margin: decibels below zero of $| T(j\omega_{180^\circ}) |$.

- Phase margin: degrees above -180° at the frequency ω_{0dB} at which $| T(j\omega_{0dB}) | = 1$, or 0 db.

$$\phi_m = 180 + \angle T(j\omega_{0dB})$$

  Note that $\angle T(j\omega_{0dB})$ is usually negative.

- The amplifier is unstable if the gain and phase margins are negative. If the margins are positive or zero the amplifier is *stable* or *marginally stable*, respectively.

Peaking and Ringing

- For an amplifier with a transfer function with a second order denominator and no zeros, the denominator has the form

$$s^2 + 2\xi\omega_n s + \omega_n^2$$

where $\xi$and ω_n are the *damping ratio* and *natural frequency*, respectively. The following formulae is valid for such amplifiers.

- The *quality factor* Q is related to the damping ratio as $Q = \frac{1}{2\xi}$.

- The *gain peaking* is given, for $Q > \frac{1}{\sqrt{2}}$, by

$$GP = 20log_{10}\frac{2Q^2}{\sqrt{4Q^2 - 1}}$$

- The *percent of overshoot* (OS) is, for $\xi < 1$, given by

$$OS(\%) = 100exp\frac{-\pi\xi}{\sqrt{1 - \xi^2}}$$

- The phase margin is related to ξ and Q as follows

$$\phi_m = arccos\left(\sqrt{4\xi^4 + 1} - 2\xi^2\right) = arccos\left(\sqrt{1 + \frac{1}{4Q^4}} - \frac{1}{2Q^2}\right)$$

- Some convenient numbers:

ϕ_m	GP (dB)	OS(%)
60°	≈ 0.3	≈ 8.8
45°	≈ 2.4	≈ 23
30°	≈ 5	≈ 43

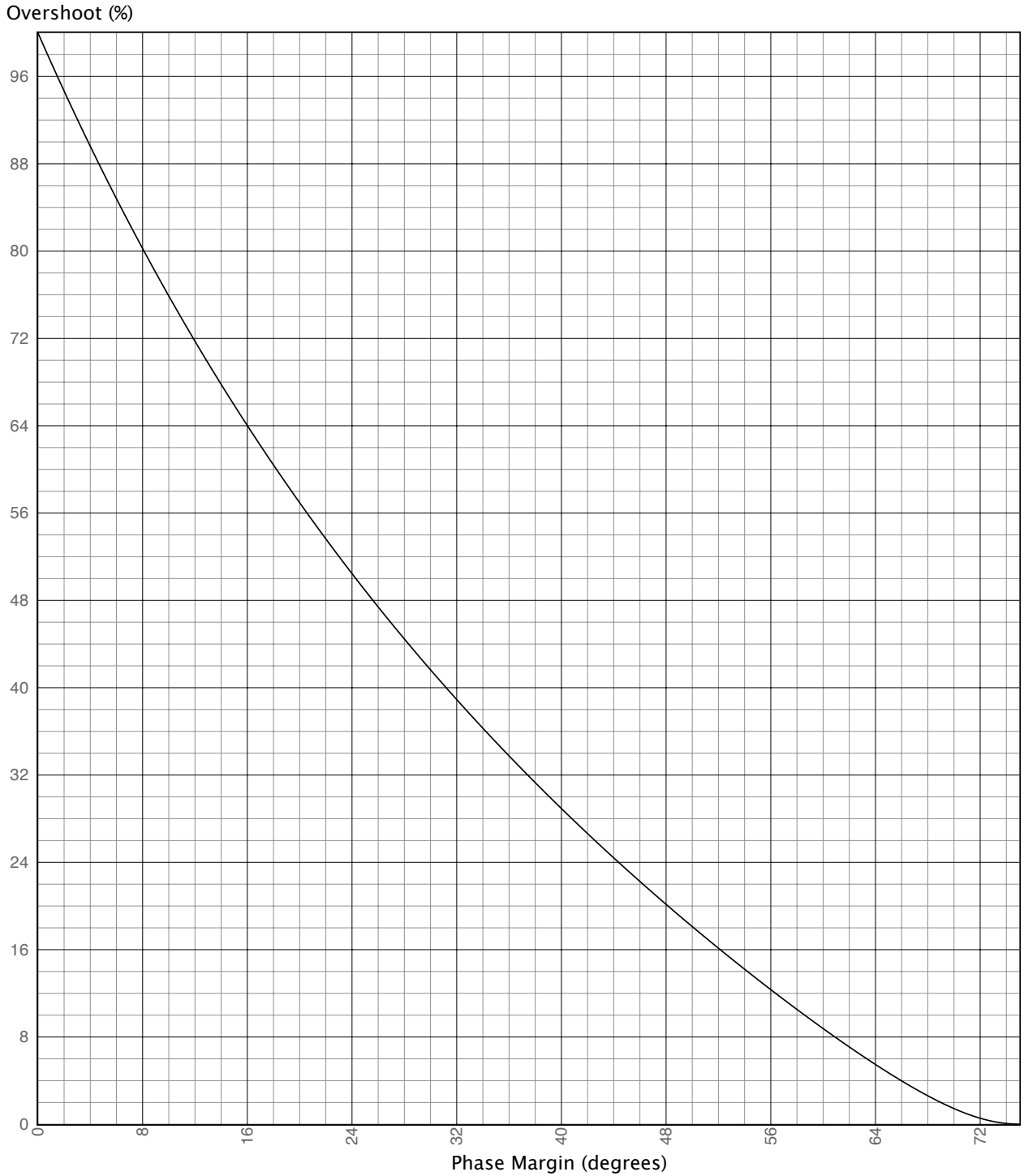
Overshoot (%)
96
88
80
72
64
56
48
40
32
24
16
8
0
0
8
16
24
32
40
48
56
64
72
Phase Margin (degrees)

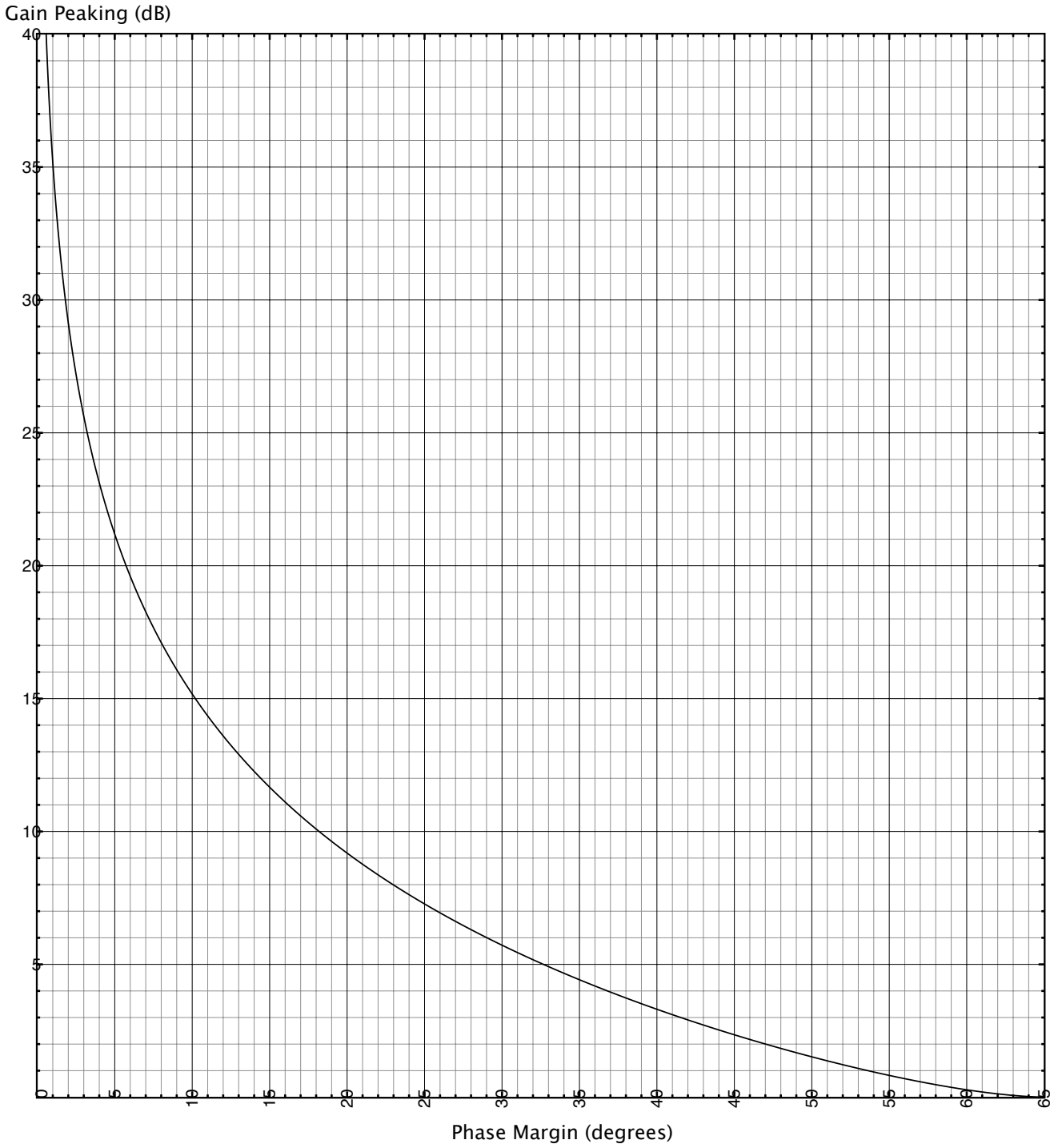
Gain Peaking (dB)
40
35
30
25
20
15
10
5
0
5
10
15
20
25
30
35
40
45
50
55
60
65
Phase Margin (degrees)

Rate of Closure

- The phase of a transfer function H can be estimated from its magnitude Bode plot. Let Δ_{0dB} represent the slope of the transfer function's magnitude at crossover frequency, expressed in dB/decade. If the roots of H are real and at least a decade apart, then

$$\angle H \approx 4.5 \times \Delta_{0dB}$$

- Since $\mid T(s) \mid = \mid \beta(s) \mid \mid a(s) \mid$, expressed in decibels

$$T_{dB} = a_{dB} + \beta_{dB} = a_{dB} - \left(\frac{1}{\beta}\right)_{dB}$$

so we can obtain the magnitude Bode plot of $T(s)$ from that of $a(s)$ by subtracting that of $1/\beta$. The *rate of closure* give us the slope of T_{dB} at crossover frequency and can be obtained from

$$ROC = \mid \Delta_a - \Delta_{1/\beta} \mid$$

where Δ_a and $\Delta_{1/\beta}$ are the slopes of a_{dB} and $(1/\beta)_{dB}$ at the crossover frequency.

- We can use the above formulas to find the phase margin from the rate of closure. Some easy to remember numbers are:

ROC (dB/dec)	ϕ_m(degrees)
20	90
30	45
40	0
over 40	less than 0

simple differentiator

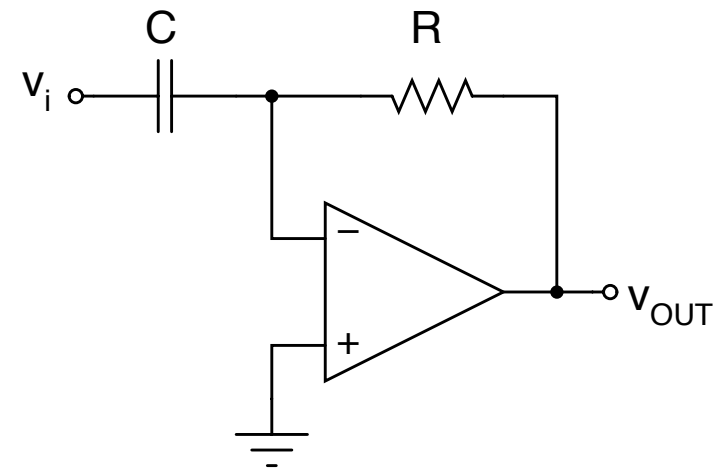

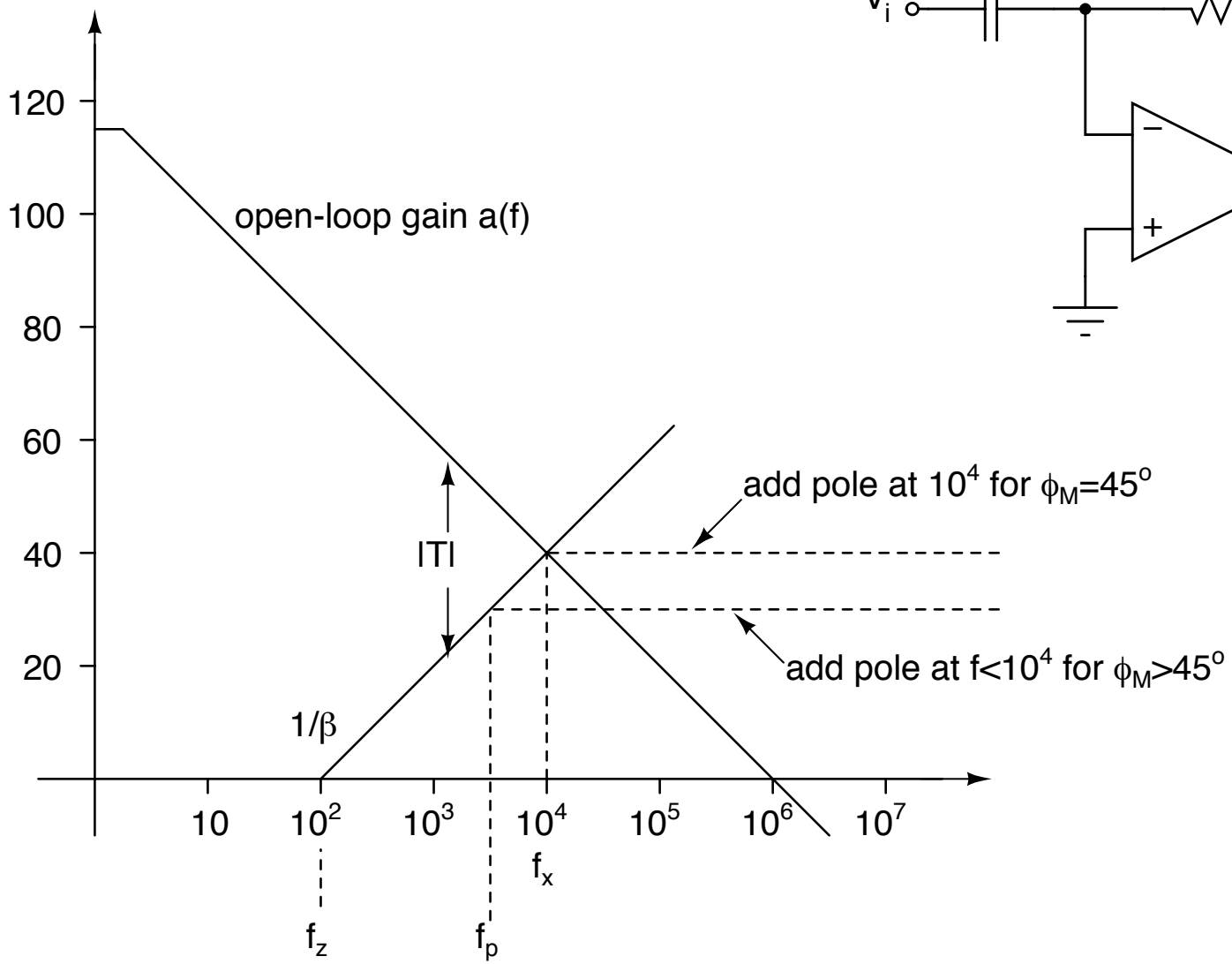

$$\begin{aligned}\beta_{ni} &= \frac{1/sC}{R + 1/sC} \\ &= \frac{1}{sRC + 1} = \frac{1}{s/\omega_0 + 1}\end{aligned}$$

$$\boxed{\text{Pole on } \beta \text{ at } 2\pi f_0 = 1/RC \text{ is a zero of } 1/\beta}$$

The closed-loop transfer function is:

$$\begin{aligned}A_{cl}(s) &= A_{ideal}\frac{1}{1 + 1/\beta_{ni}a} \\ a(s) &= \frac{a_0}{1 + s/\omega_B} \simeq \frac{a_0}{s/f_B} \\ &= \frac{1}{s/a_0\omega_B} = \frac{\omega_\tau}{s}\end{aligned}$$

At crossing frequency f_x,

$$
\begin{aligned}
| \, a(f_x) \, | &= | \, \frac{1}{\beta(f_x)} \, | \\
\frac{f_\tau}{f_x} &= \sqrt{\left(\frac{f_x}{f_0}\right)^2 + 1} \\
\left(\frac{f_\tau}{f_x}\right)^2 &= \left(\frac{f_x}{f_0}\right)^2 + 1 \\
\left(\frac{f_\tau}{f_x}\right)^2 &\simeq \left(\frac{f_x}{f_0}\right)^2 \\
f_x &= \sqrt{f_0 f_\tau}
\end{aligned}
$$

For $\phi_m = 45°$ $\rightarrow$ add pole at f_x

For $\phi_m > 45°$, let

f_p: freq. of new pole

f_{x2}: new crossing freq.

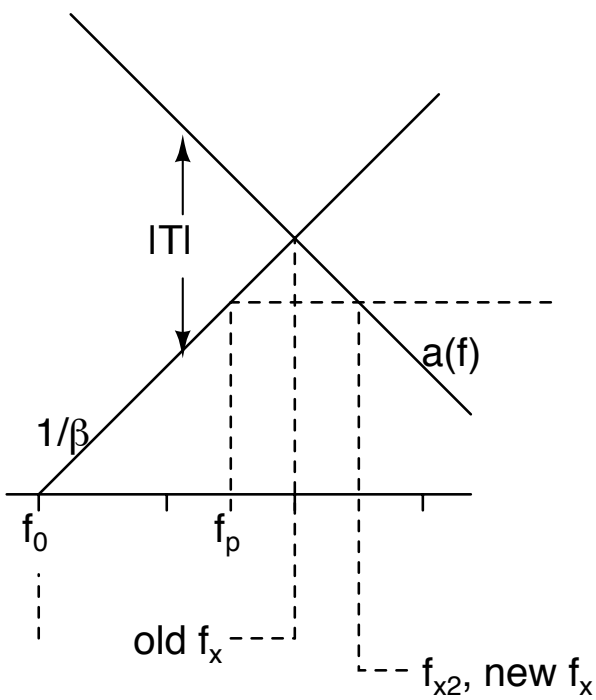

$$\frac{f_{x2}}{f_p} = \tan\phi_m$$

$$f_x = \sqrt{f_{x2} f_p}$$

$$f_p = f_x / \sqrt{\tan\phi_m}$$

Add R_S to introduce a pole in $1/\beta$

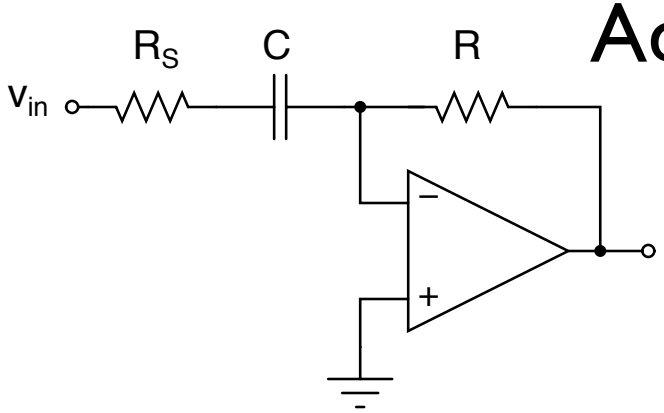

$$\beta_{ni} = \frac{R_S + 1/sC}{R + R_S + 1/sC}$$
$$= \frac{sCR_S + 1}{sC(R + R_S) + 1}$$

Pole of β moves from $f_0 = 1/2\pi RC$ to $1/2\pi C(R+R_S)$.
Zero is introduced at $1/2\pi R_S C$.
To avoid moving the pole, select $R_S << R$.

Example: $f_\tau = 10^6 Hz$, $R = 159k\Omega$, $C = 10pF$. Compensate for $\phi_m = 45°$ and for $\phi_m = 60°$.

Closed-loop response:

$$
\begin{aligned}
A_{cl} &= A_{ideal}\frac{1}{1+1/T} \\
A_{ideal} &= -s/\omega_0 \\
T = \beta_{ni}a &= \frac{\omega_\tau}{s}\frac{1}{1+s/\omega_0} \\
A_{cl} &= A_{ideal}\frac{1}{1+s(1+s/\omega_0)/\omega_\tau} \\
&= A_{ideal}\frac{1}{1+s/\omega_\tau+s^2/\omega_0\omega_\tau} \\
&= A_{ideal}\frac{1}{1+jf/f_\tau-f^2/f_0f_\tau}
\end{aligned}
$$

$$\boxed{f_x = \sqrt{f_0 f_\tau}} \qquad \boxed{Q = \sqrt{f_\tau/f_0}}$$

Stray input capacitance compensation

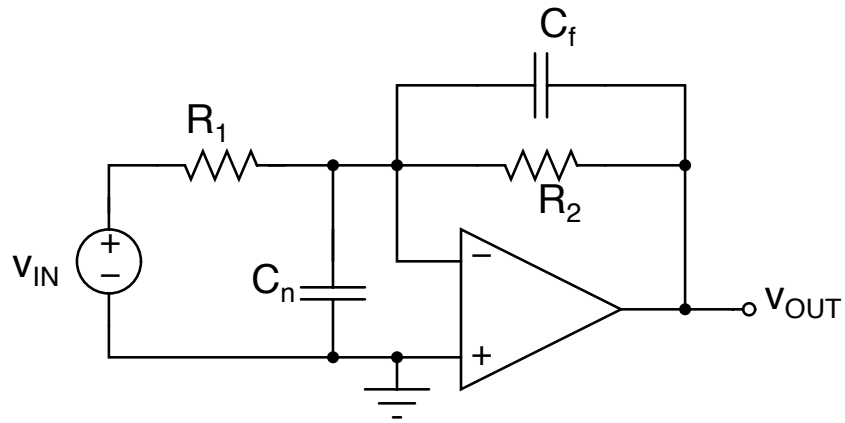

$$
\begin{aligned}
Z_1 &= \frac{R_1 \times 1/sC_n}{R_1 + 1/sC_n} = \frac{R_1}{sC_nR_1 + 1} \\
Z_2 &= \frac{R_2 \times 1/sC_f}{R_2 + 1/sC_f} = \frac{R_2}{sC_fR_2 + 1} \\
\beta &= \frac{Z_1}{Z_1 + Z_2} \\
\frac{1}{\beta} &= \left(1 + \frac{R_2}{R_1}\right)\frac{1 + jf/f_z}{1 + jf/f_p} \\
f_p &= 1/2\pi R_2 C_f \\
f_z &= 1/2\pi(R_1 \parallel R_2)(C_n + C_f)
\end{aligned}
$$

For $f = \infty$

$$R_1 \parallel 1/sC_n \simeq 1/sC_n$$

$$R_2 \parallel 1/sC_f \simeq 1/sC_f$$

$$1/\beta_\infty \simeq 1 + C_n/C_f$$

To place pole in a,

$$\frac{1}{2\pi R_2 C_f} = \beta_\infty f_\tau = \frac{f_\tau}{1 + C_n/C_f}$$

Spice Example

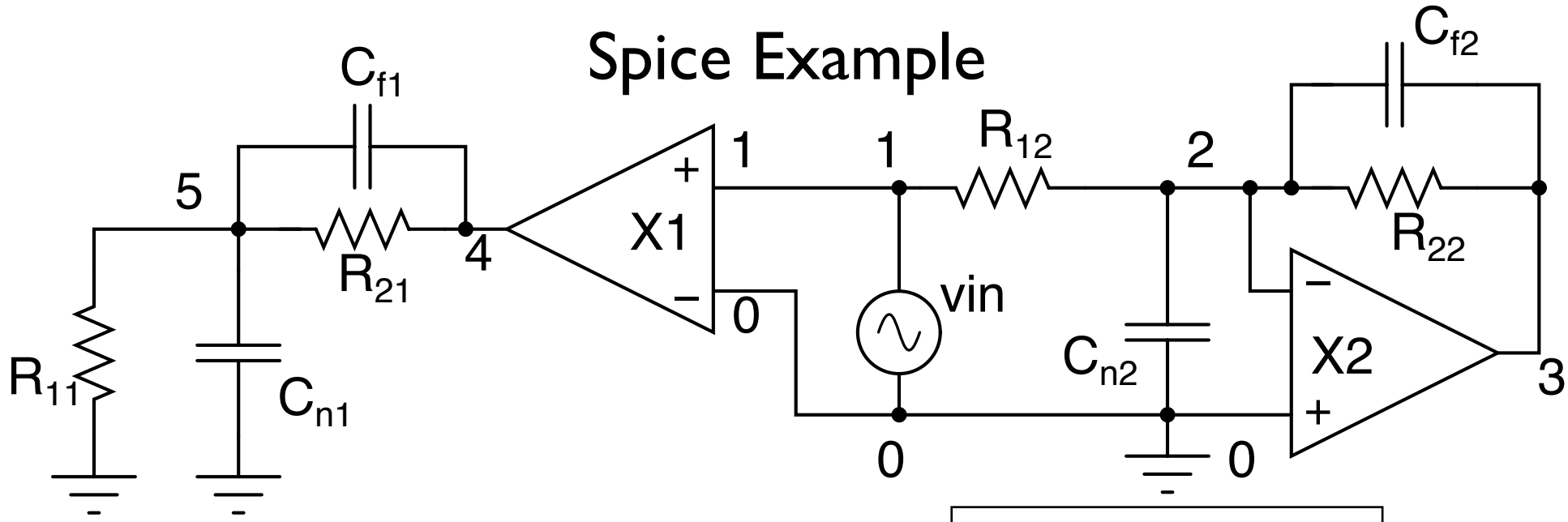


```
VCC 10 0 DC 15
VEE 20 0 DC -15
* ac source is directly connected to opamp's non-inv input
vin 1 0 dc 0 ac 1
** circuit to get open-loop response
* Cp places opamp low-freq pole -> C11 = 150/fp ; units pF
* Cp 4 5 30pF - original pole position at f<10Hz
* Cp 4 5 15E-16 - places pole at 100kHz
Cp 40 50 30pF
X1 1 0 10 20 4 40 50 uA741_unc
* beta network
* add C1 || R1 to get a pole on beta network
R11 0 5 30k
Cn1 0 5 16nF
R21 4 5 30k
Cf1 4 5 294pF
```

```
Cp2 41 51 30pF
X2 0 2 10 20 3 41 51 uA741_unc
R12 1 2 30k
Cn2 0 2 16nF
R22 2 3 30k
Cf2 2 3 294pF
```

```
.SUBCKT uA741_unc 1 2 3 4 5 6 7
* connections:
*       1  noninv input
*       2  inv input
*       3  Vcc
*       4  Vee
*       5  Output
*       6  Compensation capacitor terminal 1
*       7  Compensation capacitor terminal 2
* use external C2 = 150/fp (in pF)
* c2   6 7 30.00E-12 - produces original low freq. pole at ~5Hz
* c2   6 7 3.00E-15   - pole to about 60kHz
```

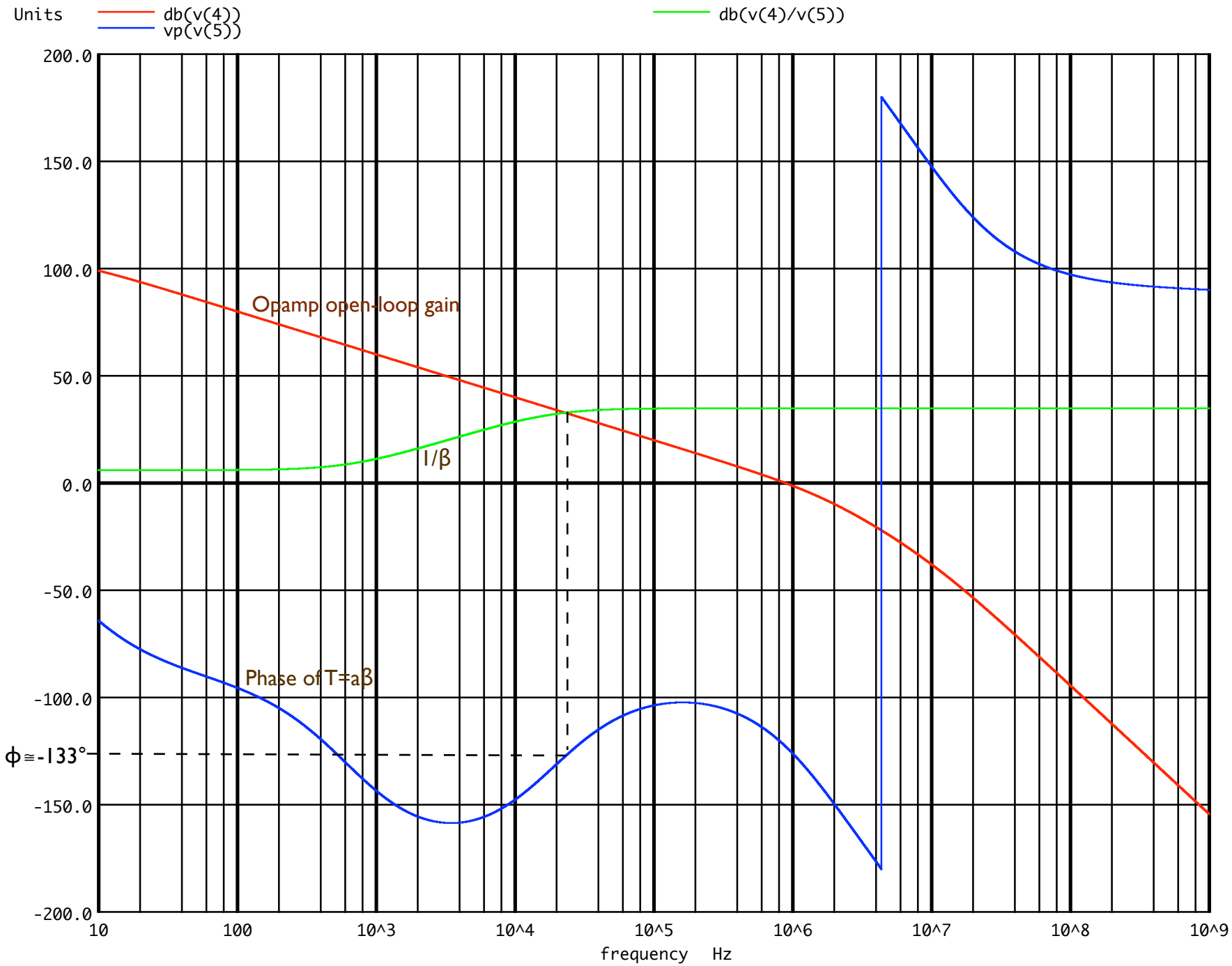
Units
db(v(4))
vp(v(5))
db(v(4)/v(5))
200.0
150.0
100.0
50.0
0.0
-50.0
-100.0
-150.0
-200.0
Opamp open-loop gain
1/β
Phase of T=aβ
ϕ≅-133°
10
100
10^3
10^4
10^5
10^6
10^7
10^8
10^9
frequency Hz

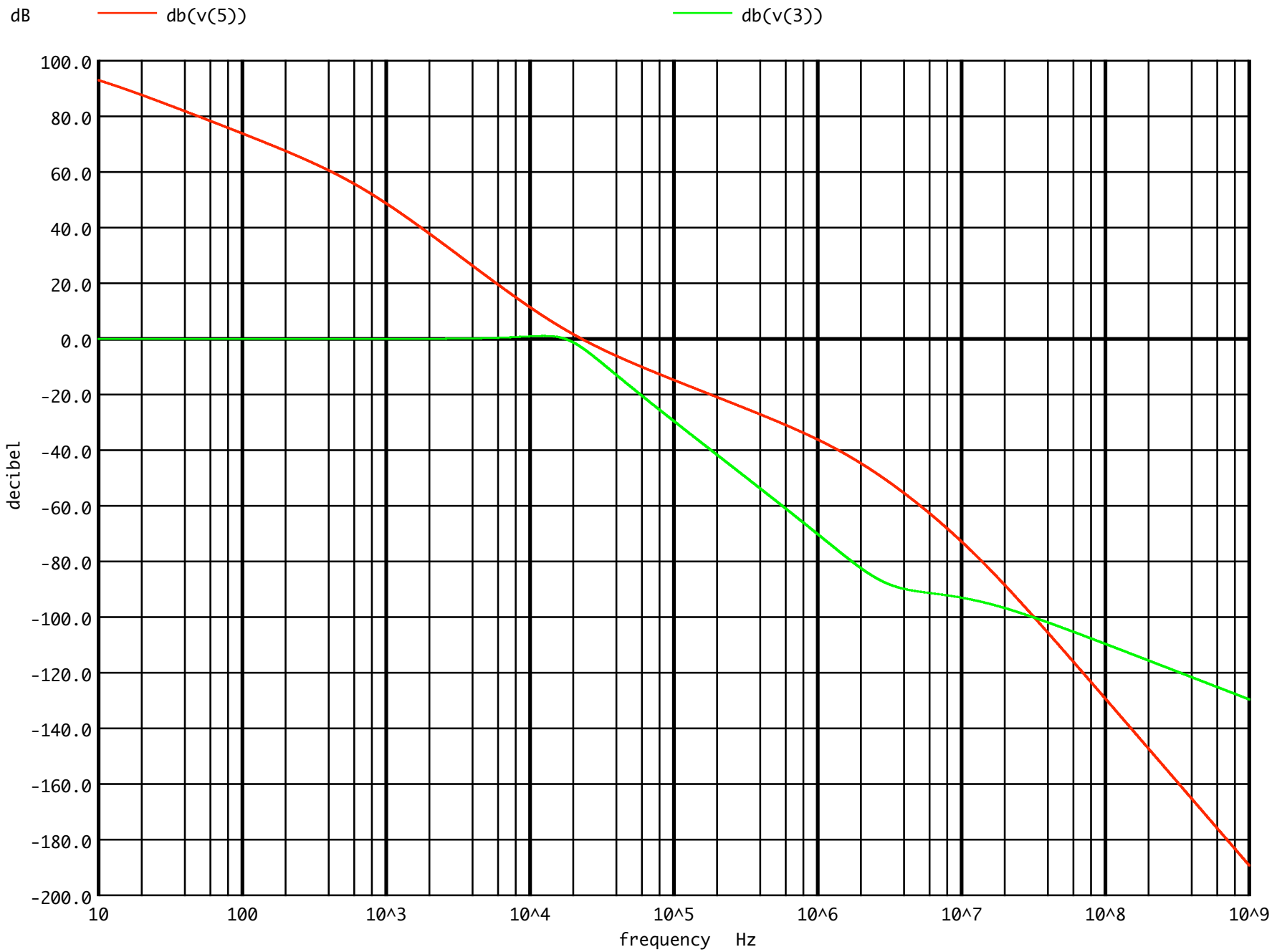
dB
db(v(5))
db(v(3))
100.0
80.0
60.0
40.0
20.0
0.0
-20.0
-40.0
-60.0
-80.0
-100.0
-120.0
-140.0
-160.0
-180.0
-200.0
decibel
10
100
10^3
10^4
10^5
10^6
10^7
10^8
10^9
frequency Hz

Compensation Techniques

Basics

Compensation by pole-addition (dominant pole compensation)

Compensation by pole-shifting
(shunt-capacitance compensation)

Pole-zero compensation
(move first pole to lower frequency and
cancelation of second pole)

Reducing T

This affects T but not the A_{ideal}

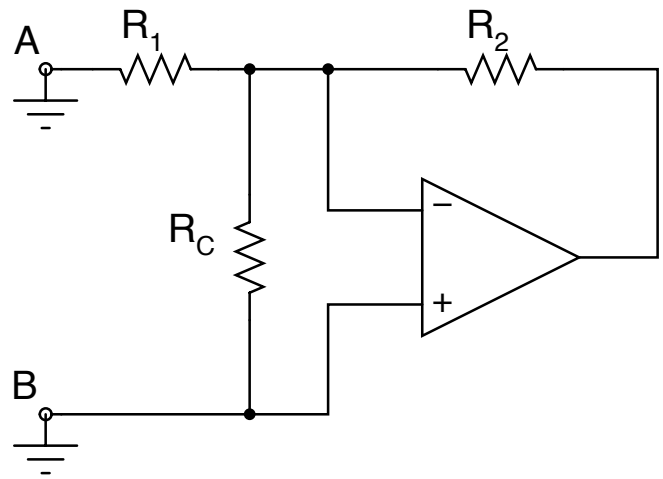

Assuming $r_d = \infty$ and $r_O = 0$, Franco's β becomes

$$\frac{1}{\beta} = 1 + \frac{R_2}{R_1 \,||\, R_C} = 1 + \frac{R_2}{R_1} + \frac{R_2}{R_C}$$

We need to move $\frac{1}{\beta}$to $a(f_2)$, where f_2 is the frequency of the second pole. Since the phase is 135°at this frequency, this would yield a phase margin $\phi_m = 45°$.

Notice that this is equivalent to increasing the closed-loop gain. The problem with this is that then the d.c. gain is increased and therefore the effect of the offsets is greater. To reduce this problem, use the following input-lag circuit:

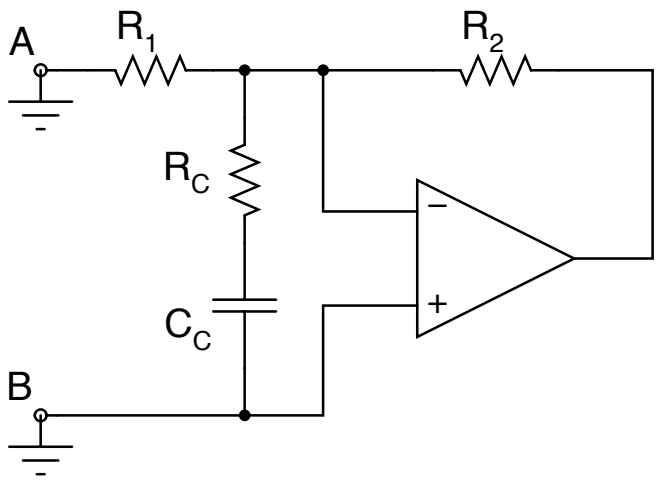

tt

$$
\begin{aligned}
Z_1 &= R_1 \parallel \left(R_C + \frac{1}{sC_C}\right) = R_1 \frac{1 + sC_C R_C}{1 + sC_C(R_C + R_1)} \\
\beta &= \frac{Z_1}{R_2 + Z_1} = R_1 \frac{1 + sC_C R_C}{R_2 + sC_C(R_C + R_1)R_2 + R_1 + sC_C R_C R_1} \\
&= \frac{R_1}{R_1 + R_2} \frac{1 + sC_C R_C}{1 + sC_C(R_C R_2 + R_1 R_2 + R_C R_1)/(R_1 + R_2)} \\
&= \frac{R_1}{R_1 + R_2} \frac{1 + sC_C R_C}{1 + sC_C(R_1 \parallel R_2 + R_C)} \\
1/\beta &= \left(1 + \frac{R_2}{R_1}\right) \times \frac{1 + jf/f_p}{1 + jf/f_z} \\
f_p &= \frac{1}{2\pi C_C R_C} \\
f_z &= \frac{1}{2\pi C_C(R_1 \parallel R_2 + R_C)} \\
1/\beta_\infty &= \left(1 + \frac{R_2}{R_1}\right) \times \frac{f_p}{f_z} \\
&= \left(1 + \frac{R_2}{R_1}\right) \times \left(1 + \frac{R_1 \parallel R_2}{R_C}\right)
\end{aligned}
$$

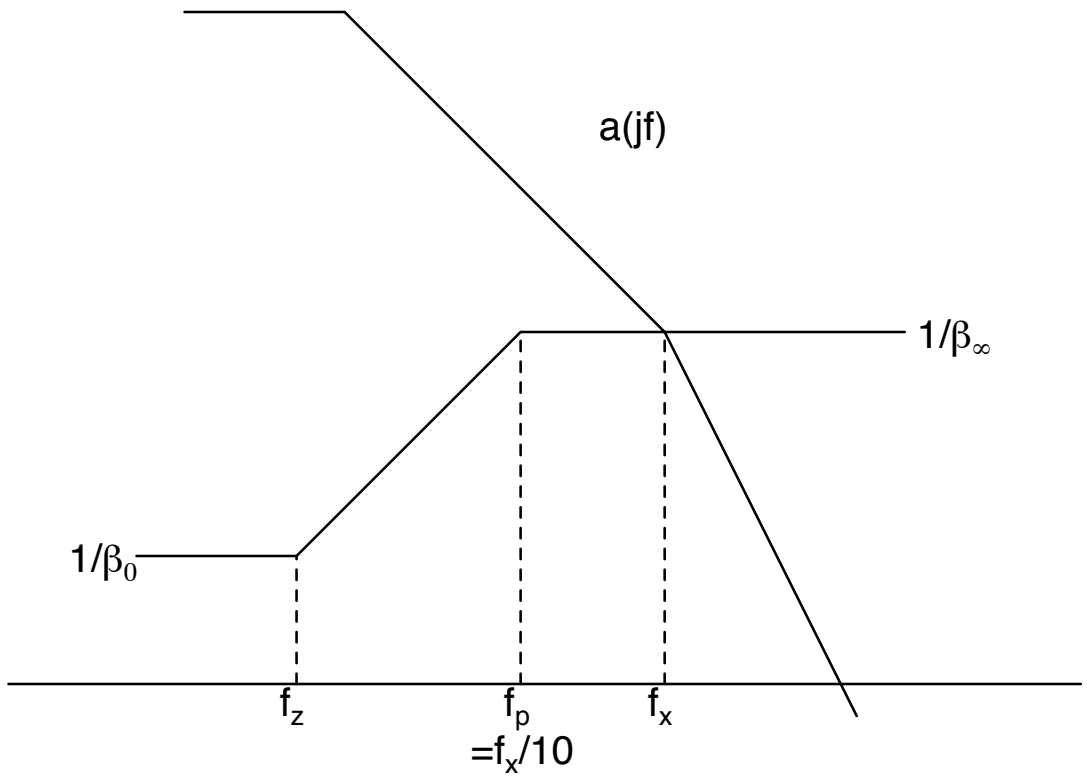

- find f_x from $a(jf)$ and the desired ϕ_m
- use magnitude of $a(jf_x)$ to find R_C
- select C_C so that f_p is at least one decade below f_x

feedback-lead compensation

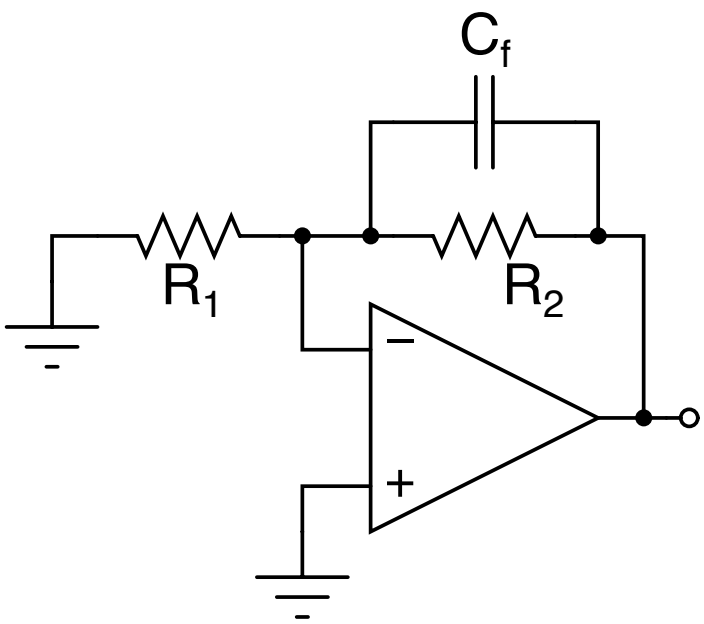

$$
\begin{aligned}
Z_2 &= \frac{R_2}{sC_f R_2 + 1} \\
\beta &= \frac{R_1}{R_1 + Z_2} \\
1/\beta &= \frac{1}{\beta_0} \times \frac{1 + jf/f_z}{1 + jf/f_p} \\
f_p &= \frac{1}{2\pi C_f R_2} \\
f_z &= \frac{1}{2\pi C_f (R_1 \parallel R_2)} \\
&= f_p \left(1 + \frac{R_2}{R_1}\right)
\end{aligned}
$$

For maximum lead, select $f_x = \sqrt{f_p f_z} = f_p \sqrt{1 + \frac{R_2}{R_1}}$

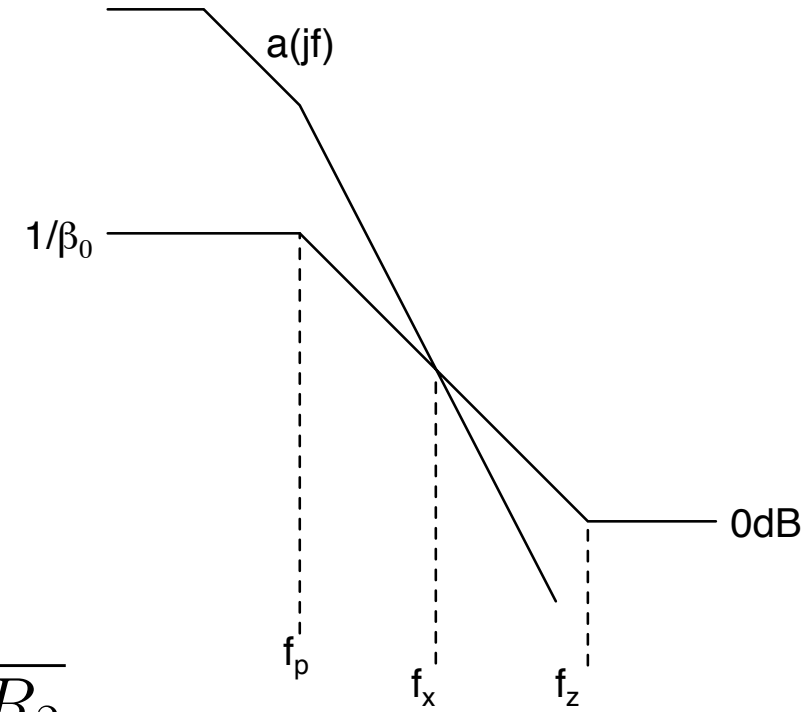

Due to symmetry,

$$| \, a(jf_x) \, | = \sqrt{1 + \frac{R_2}{R_1}}$$

Use this to find f_x and then select

$$C_f = \frac{1}{2\pi f_p R_2} = \frac{\sqrt{1 + \frac{R_2}{R_1}}}{2\pi R_2 f_x}$$